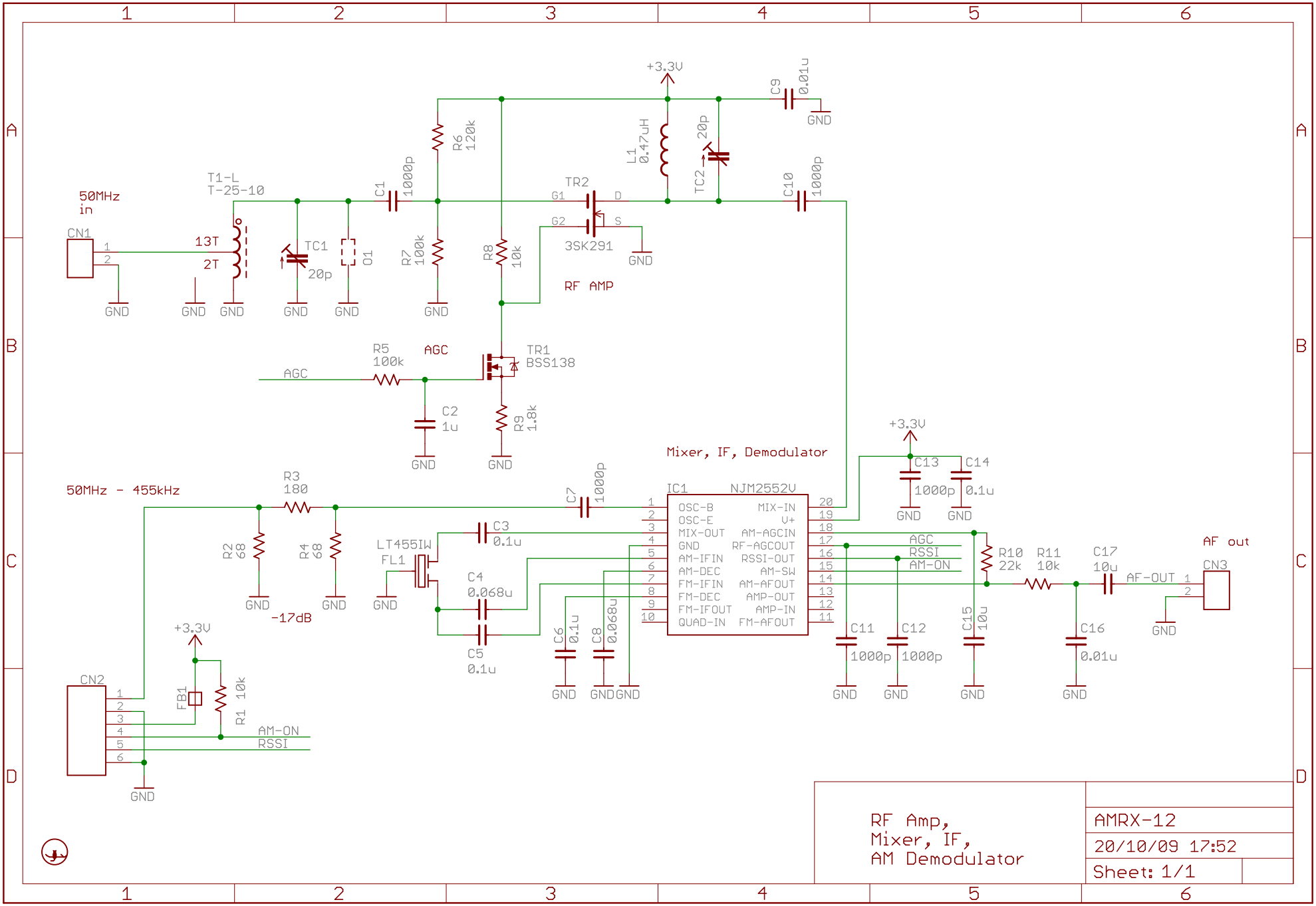

RF Amp,
Mixer, IF,
AM Demodulator

AMRX-12

20/10/09 17:52

Sheet: 1/1