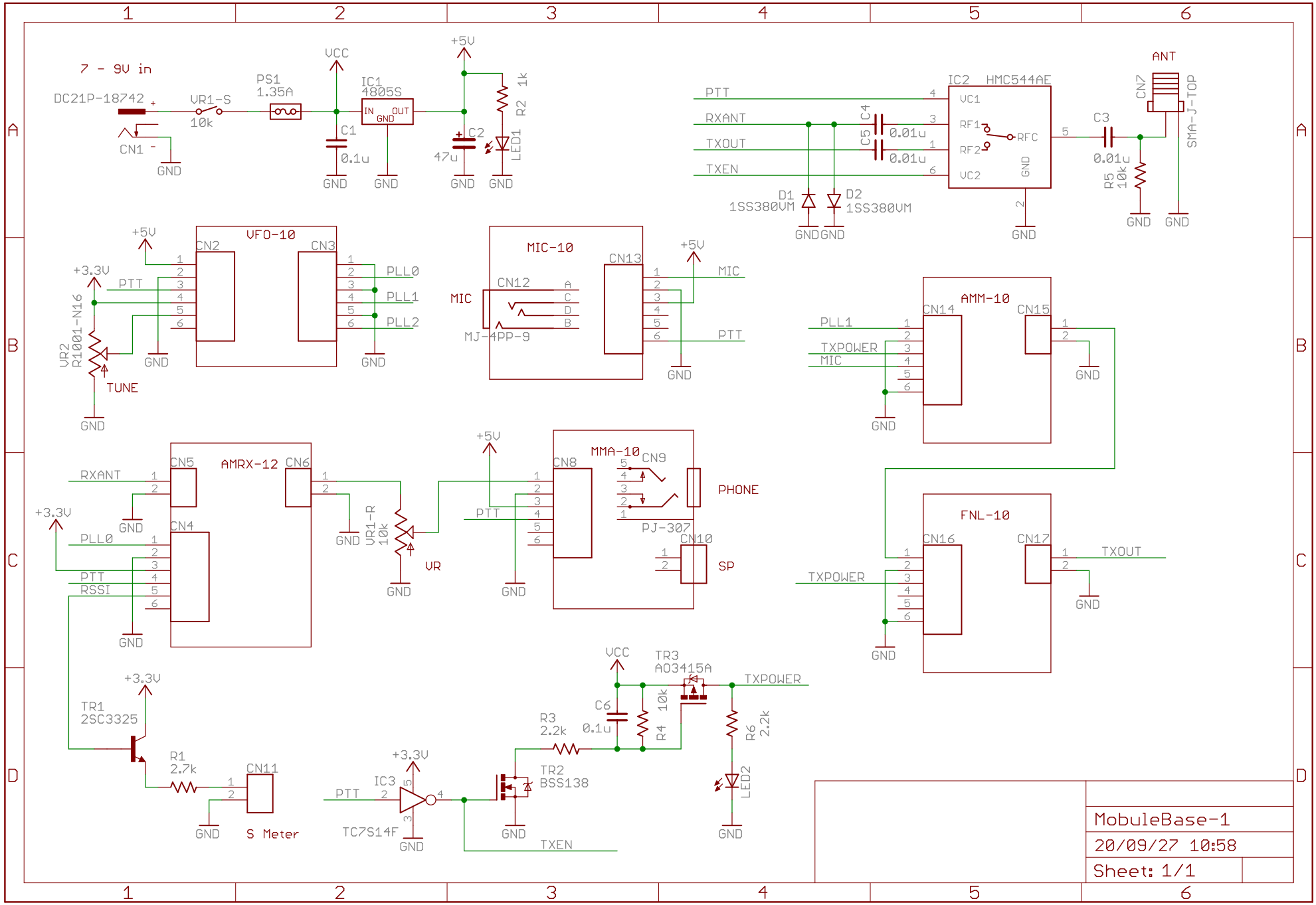
7 - 9V in
DC21P-18742
CN1
VR1-S
10k
PS1
1.35A
VCC
IC1
4805S
IN
OUT
GND
C1
0.1u
+5V
C2
47u
LED1
R2 1k
IC2 HMC544AE
PTT
RXANT
TXOUT
TXEN
C4
C5
0.01u
0.01u
VC1
RF1
RFC
RF2
VC2
D1
1SS380VM
D2
1SS380VM
C3
0.01u
R5
10k
ANT
CN7
SMA-J-TOP
VFO-10
CN2
CN3
PLL0
PLL1
PLL2
+3.3V
VR2
R1001-N16
TUNE
MIC-10
CN12
CN13
MIC
MJ-4PP-9
AMM-10
CN14
CN15
TXPOWER
AMRX-12
CN5
CN6
CN4
RSSI
VR1-R
10k
VR
MMA-10
CN8
CN9
PHONE
PJ-307
CN10
SP
FNL-10
CN16
CN17
TXOUT
TR1
2SC3325
R1
2.7k
CN11
S Meter
IC3
TC7S14F
TR2
BSS138
R3
2.2k
C6
0.1u
R4
10k
TR3
AO3415A
R6
2.2k
LED2
MobuleBase-1
20/09/27 10:58
Sheet: 1/1